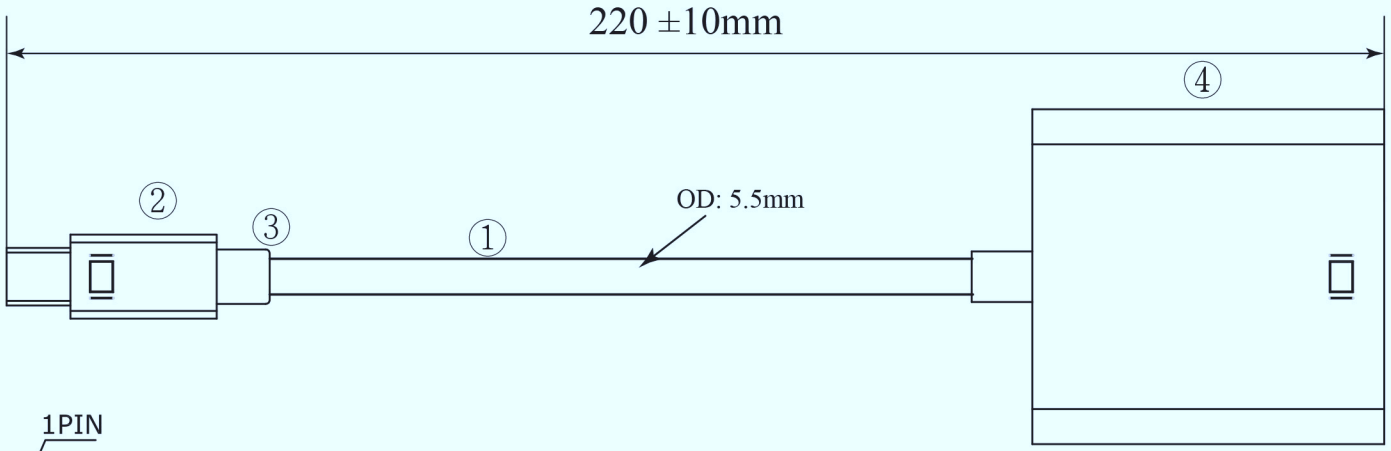

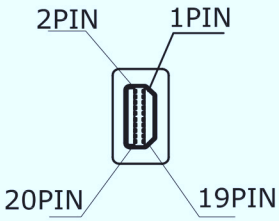

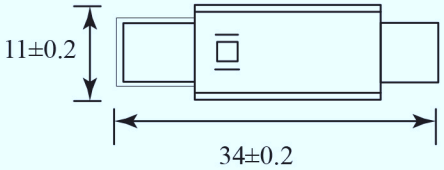

Mini DisplayPort M

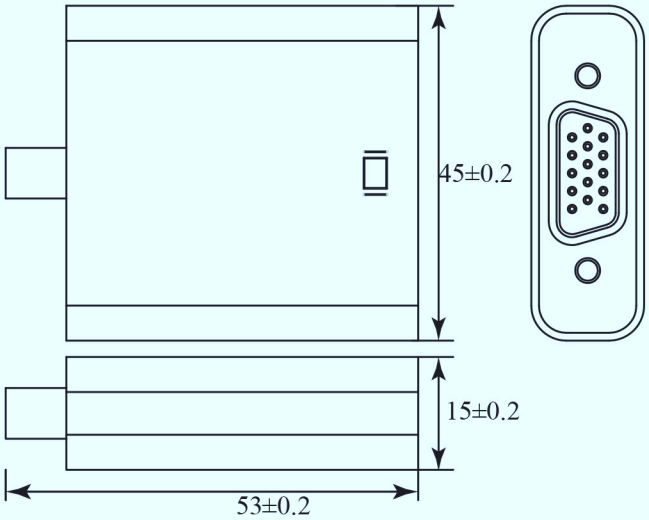

VGA F

PIN ASSIGNMENT:

Mini DisplayPort M	5	3	1	12	10	8	11	9	7	17	15	13	16	18	14	6	4	2	20	19
PCB	3	1	2	12	10	11	6	4	5	9	7	8	15	17	16	14	13	18	20	19
	TP	GND		TP		GND	TP		GND	TP		GND	TP		GND					GND

OPEN/SHORT TEST: 100% TEST.
INSULATION: 5M
RoHS Compliant

No.	Description	Qty
④	VGA F 15P Assembly Black Shell	1 PCS
③	Black 45P PVC	8g
②	Mini DisplayPort M20 Pin (Black Insulator Gold Plated)	1 PCS
①	UL20276(1P#34+D+AL)x5+#32x5C+AE+B(85%ALB) White OD=5.5mm	1 PCS

Company		Goods Code		Draw		Date	2015.06.23		D		
ITEM NO.	26-0706	Drawing Evidence		Check		Date			C		
Description	Mini DisplayPort M to VGA F Converter			Approval		Date			B		
									VER. A	REVISE	Date